Rev No	Revision note	Date	Approved By

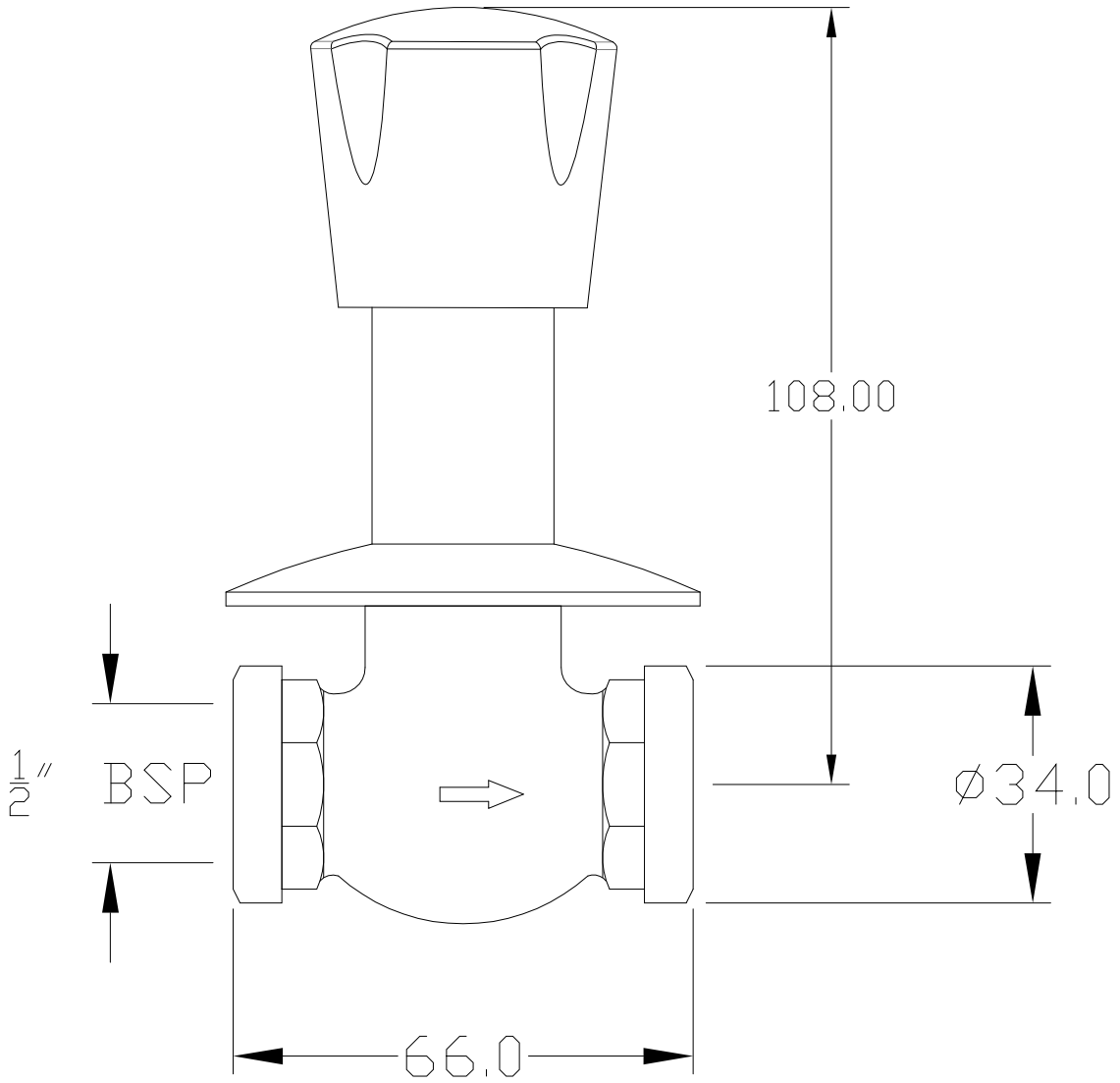

PROPRIETARY AND CONFIDENTIAL	BASIC SIZE	TOLERANCE	
		Linear	Angular
THE INFORMATION CONTAINED IN THIS DRAWING IS THE SOLE PROPERTY OF AQUA SYSTEMS PVT LTD. ANY REPRODUCTION IN PART OR AS A WHOLE WITHOUT THE WRITTEN PERMISSION OF AQUA SYSTEMS PVT LTD IS PROHIBITED.	From 0.5 up to 6	± 0.1	UP TO 10
	Over 6 up to 30	± 0.2	± 1°
	Over 30 up to 120	± 0.3	OVER 10 UP TO 50
MATERIAL BRASS	over 120 up to 400	± 0.5	± 0.5°

Jupiter Aqua Lines Ltd.

D-192, Industrial Area Phase V111-B, MOHALI (Chandigarh)

Jal Joy of India

	NAME	SIGNATURE	DATE		
DRAWN	Imtyaz			TITLE:	Concealed Stop Cock with sliding cap 15 mm
CHK'D	RAJDEEP SINGH				
APPV'D	B.S ANAND			TYPE:	*FINISHED*
MFG				CAT NO:	2545 J
QA					